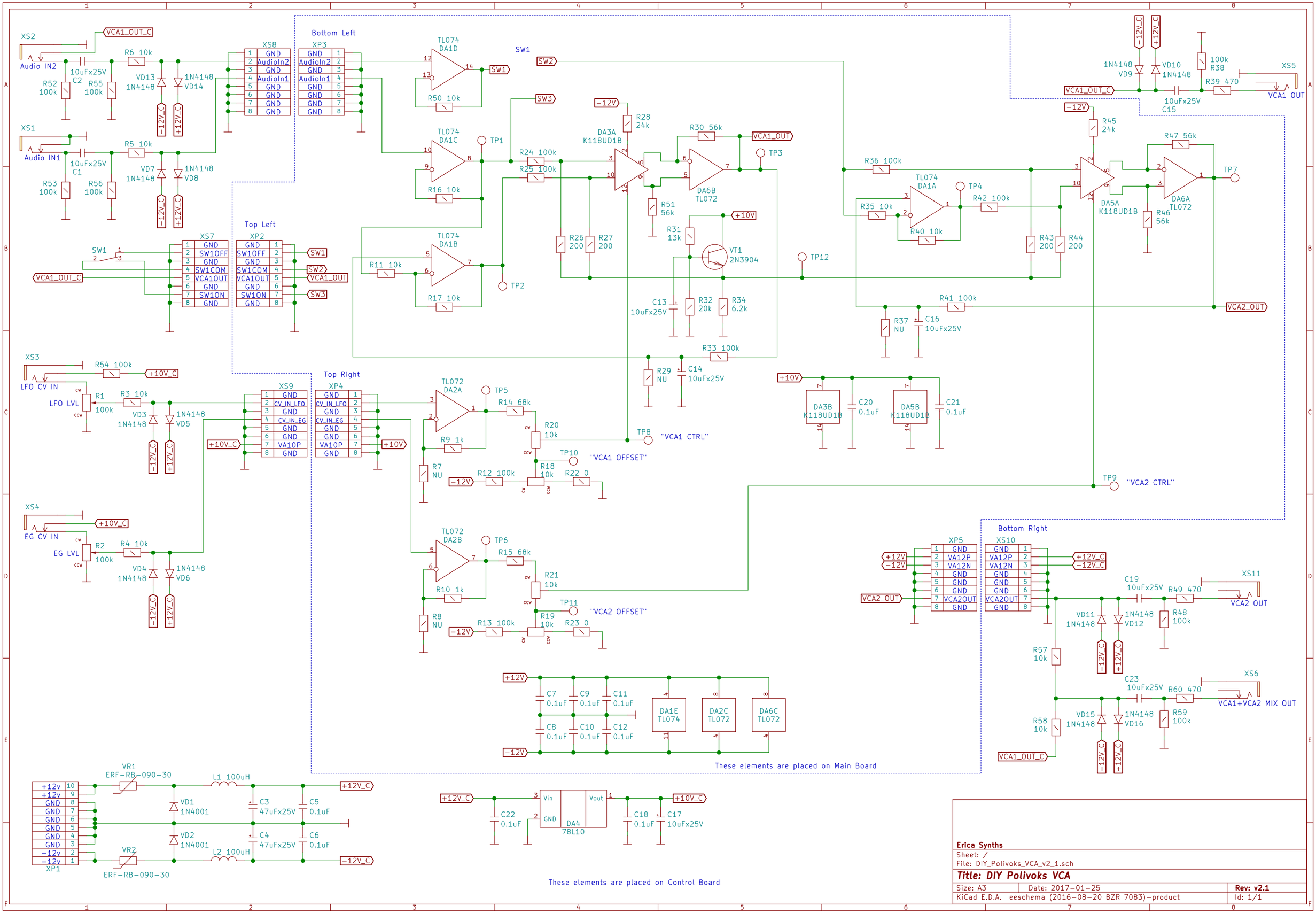
Bottom Left
Top Left
Top Right
Bottom Right
XS2
Audio IN2
XS1
Audio IN1
XS3
LFO CV IN
XS4
EG CV IN
XS5
VCA1 OUT
XS6
VCA1+VCA2 MIX OUT
XS11
VCA2 OUT
"VCA1 CTRL"
"VCA1 OFFSET"
"VCA2 CTRL"
"VCA2 OFFSET"
XP1
XP2
XP3
XP4
XP5
XS7
XS8
XS9
XS10
SW1
TL074 DA1D
TL074 DA1C
TL074 DA1B
TL074 DA1A
DA3A K118UD1B
DA6B TL072
DA5A K118UD1B
DA6A TL072
DA3B K118UD1B
DA5B K118UD1B
TL072 DA2A
TL072 DA2B
VT1 2N3904
DA1E TL074
DA2C TL072
DA6C TL072
DA4 78L10
VR1 ERF-RB-090-30
VR2 ERF-RB-090-30
These elements are placed on Main Board
These elements are placed on Control Board
Erica Synths
Sheet: /
File: DIY_Polivoks_VCA_v2_1.sch
Title: DIY Polivoks VCA
Size: A3
Date: 2017-01-25
Rev: v2.1
KiCad E.D.A. eeschema (2016-08-20 BZR 7083)-product
Id: 1/1