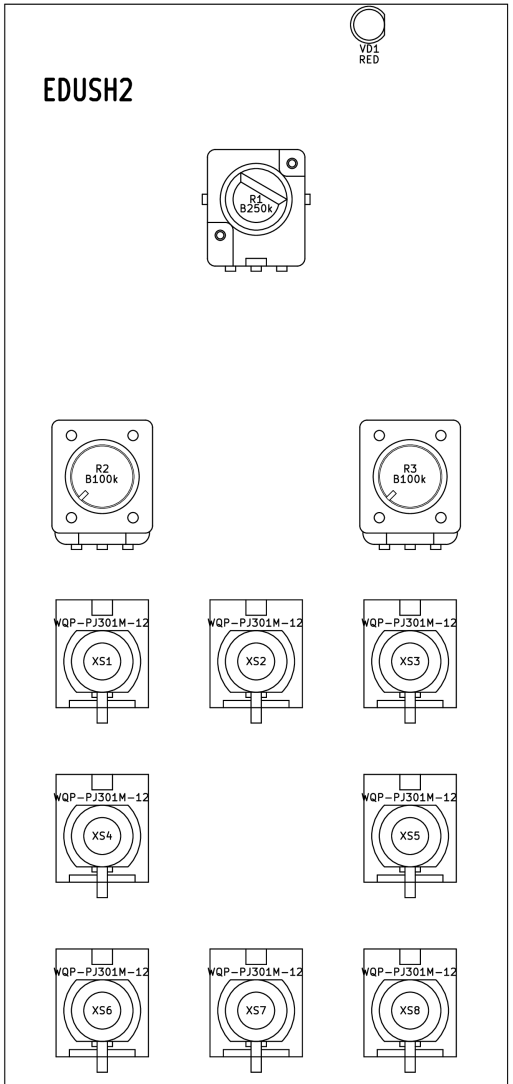
EDUSH2
VD1
RED
R1
B250k
R2
B100k
R3
B100k
WQP-PJ301M-12
XS1
XS2
XS3
XS4
XS5
XS6
XS7
XS8

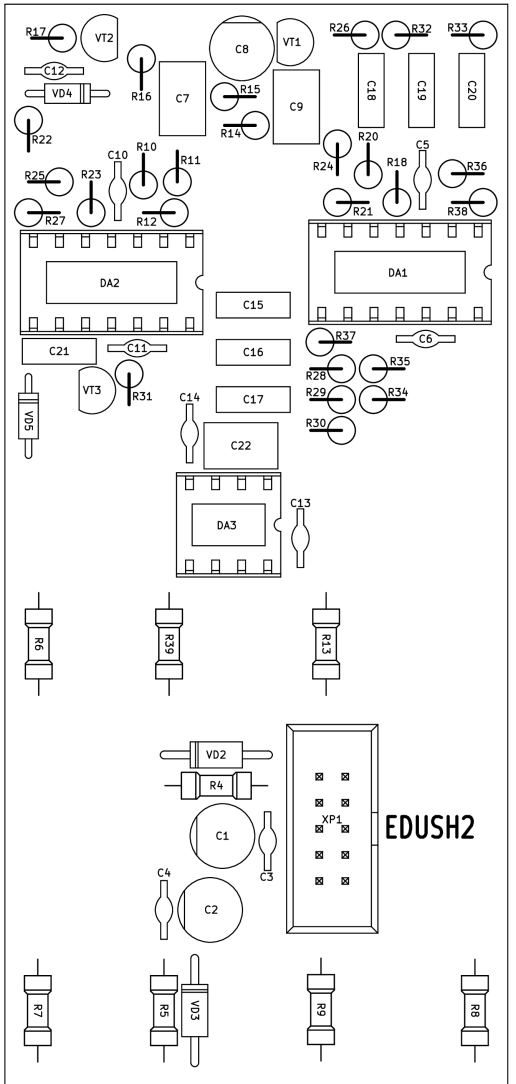
R17
VT2
C12
VD4
R16
C7
C8
VT1
R15
C9
R14
R26
R32
R33
C18
C19
C20
R22
R25
R23
C10
R10
R11
R27
R12
R24
R20
R18
C5
R36
R21
R38
DA2
DA1
C15
C16
C17
C21
C11
VT3
R31
VD5
C14
C22
DA3
C13
R37
C6
R28
R35
R29
R34
R30
R6
R39
R13
VD2
R4
C1
C3
C4
C2
XP1
EDUSH2
R7
R5
VD3
R9
R8

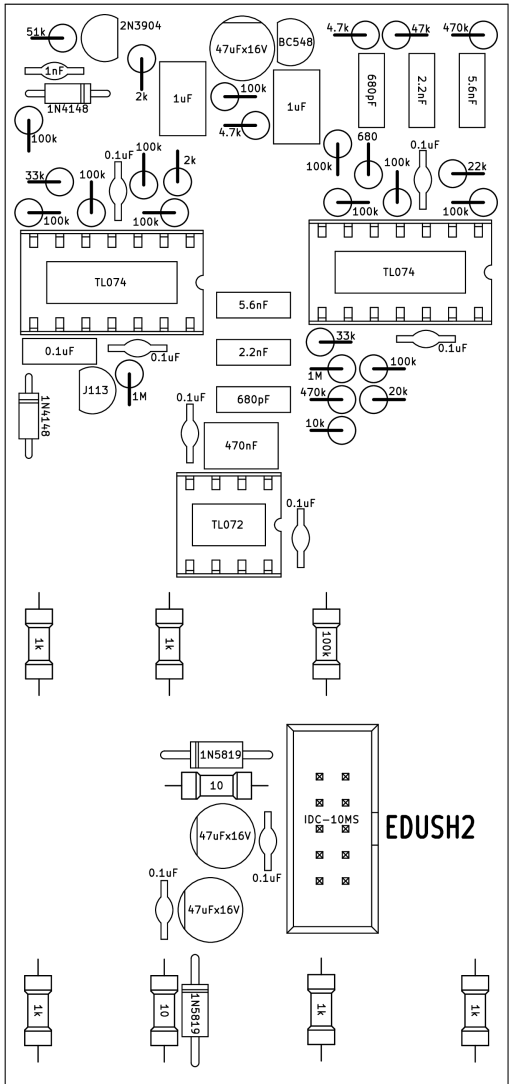
51k
2N3904
47uFx16V
BC548
4.7k
47k
470k
1nF
1N4148
2k
1uF
100k
1uF
680pF
2.2nF
5.6nF
4.7k
100k
680
0.1uF
22k
33k
100k
0.1uF
100k
2k
100k
100k
100k
100k
100k
TL074
TL074
5.6nF
0.1uF
0.1uF
2.2nF
33k
0.1uF
1M
100k
1N4148
J113
1M
0.1uF
680pF
470k
20k
10k
470nF
TL072
0.1uF
1k
1k
100k
1N5819
10
47uFx16V
IDC-10MS
EDUSH2
0.1uF
0.1uF
47uFx16V
1k
10
1N5819
1k
1k