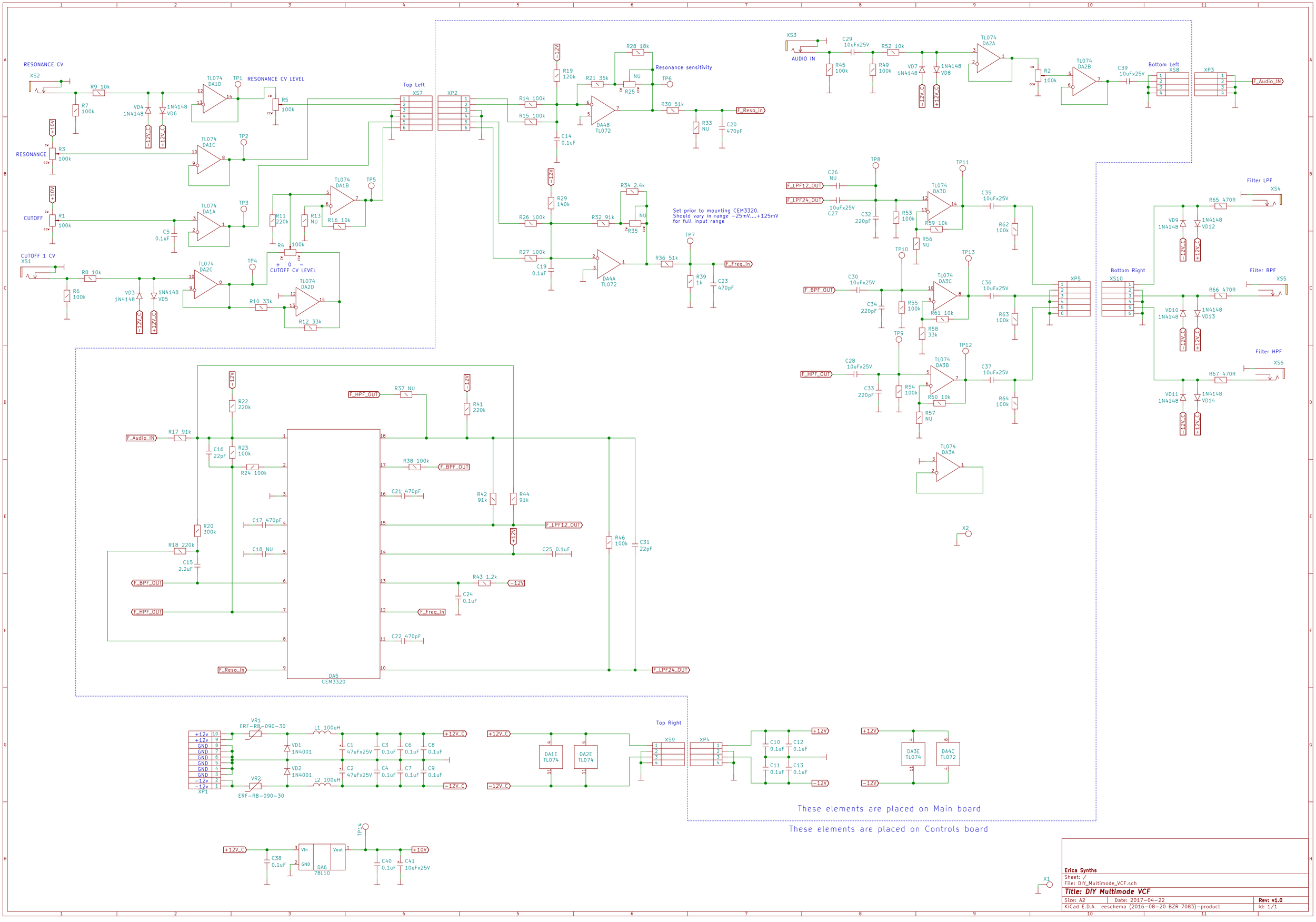

Erica Synths
Sheet: /
File: DIY_Multimode_VCF.sch

Title: DIY Multimode VCF

Size: A2	Date: 2017-04-22	**Rev: v1.0**
KiCad E.D.A. eeschema (2016-08-20 BZR 7083)-product		Id: 1/1