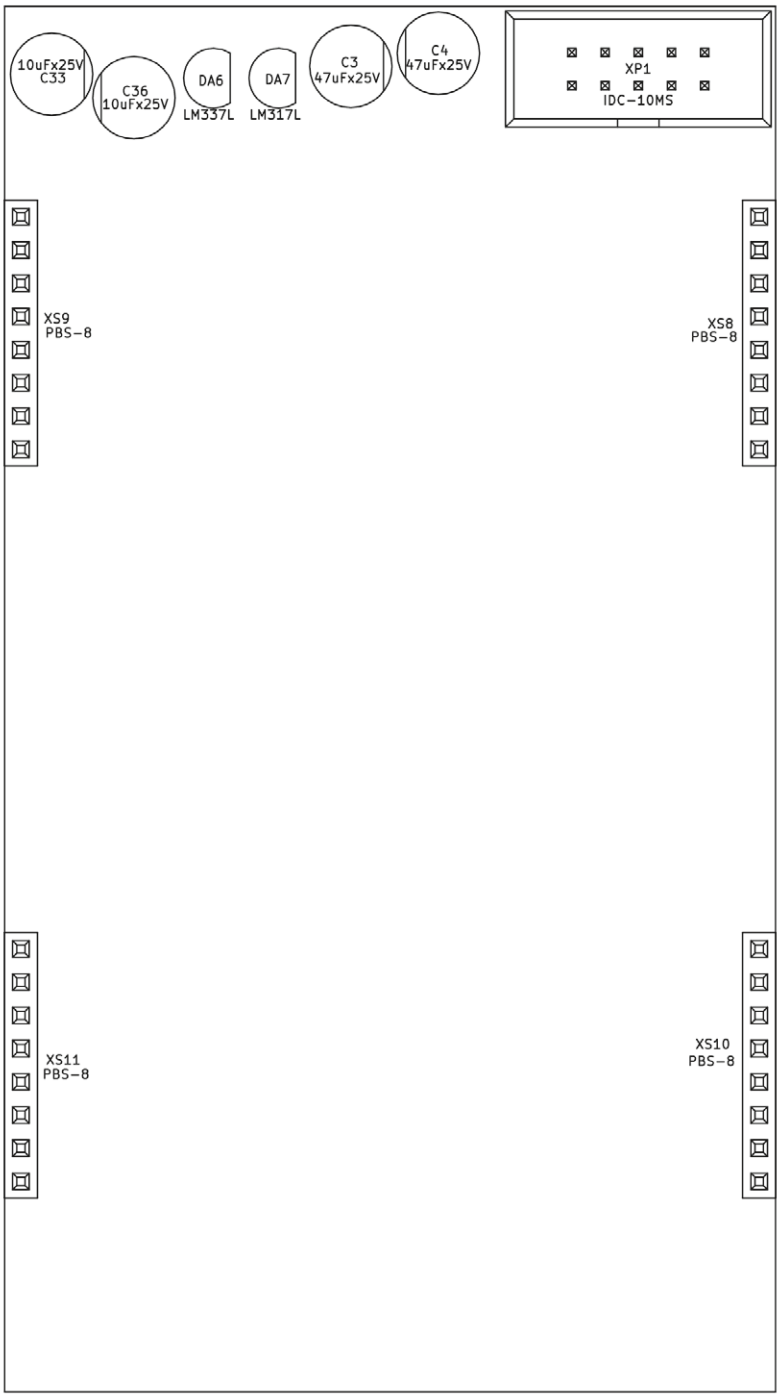
10uFx25V
C33
C36
10uFx25V
DA6
LM337L
DA7
LM317L
C3
47uFx25V
C4
47uFx25V
XP1
IDC-10MS
XS9
PBS-8
XS8
PBS-8
XS11
PBS-8
XS10
PBS-8

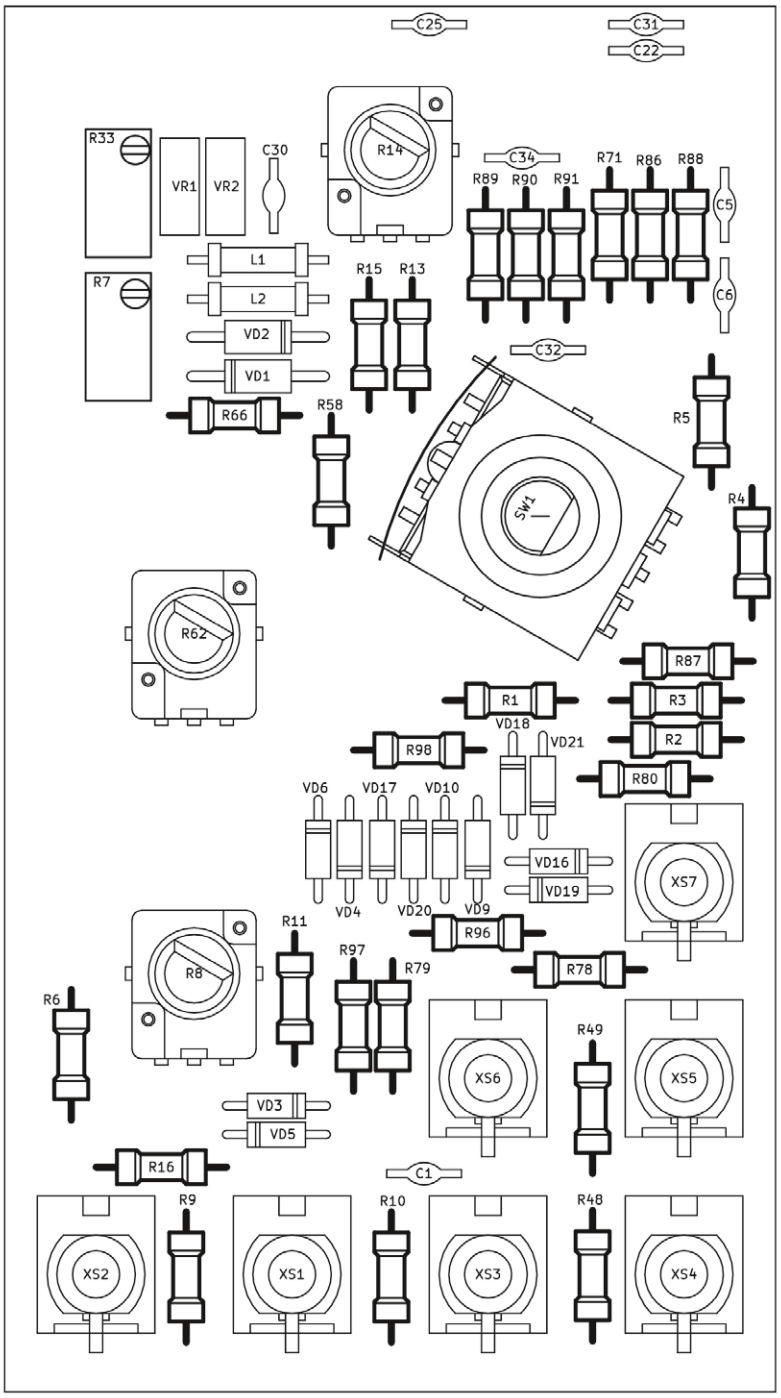
C25
C31
C22
R33
VR1
VR2
C30
R14
C34
R89
R90
R91
R71
R86
R88
C5
C6
L1
L2
R7
R15
R13
VD2
VD1
C32
R66
R58
R5
SW1
R4
R62
R87
R1
R3
VD18
VD21
R2
R98
R80
VD6
VD17
VD10
VD16
VD19
XS7
VD4
VD20
VD9
R96
R11
R97
R79
R78
R8
R6
R49
XS6
XS5
VD3
VD5
R16
C1
R9
R10
R48
XS2
XS1
XS3
XS4

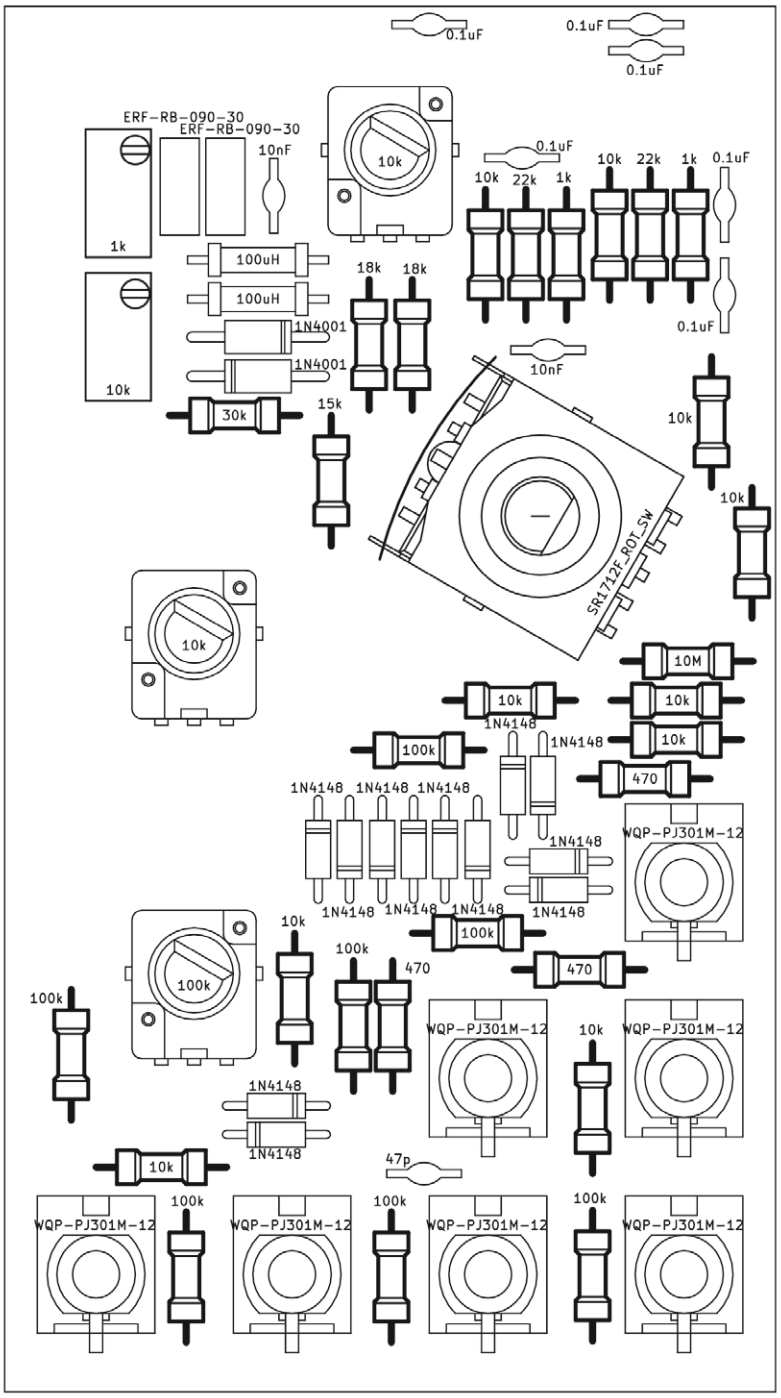
0.1uF
0.1uF
0.1uF
ERF-RB-090-30
ERF-RB-090-30
10nF
10k
0.1uF
10k 22k 1k
10k 22k 1k 0.1uF
1k
100uH
100uH
18k 18k
1N4001
1N4001
0.1uF
10nF
10k
30k
15k
10k
10k
SR1712F_ROT_SW
10k
10M
10k
10k
1N4148
1N4148
10k
100k
470
1N4148 1N4148 1N4148
WQP-PJ301M-12
1N4148
1N4148 1N4148 1N4148 1N4148
100k
10k
100k
470
470
100k
100k
WQP-PJ301M-12
10k
WQP-PJ301M-12
1N4148
1N4148
10k
47p
100k
100k
100k
WQP-PJ301M-12
WQP-PJ301M-12
WQP-PJ301M-12
WQP-PJ301M-12

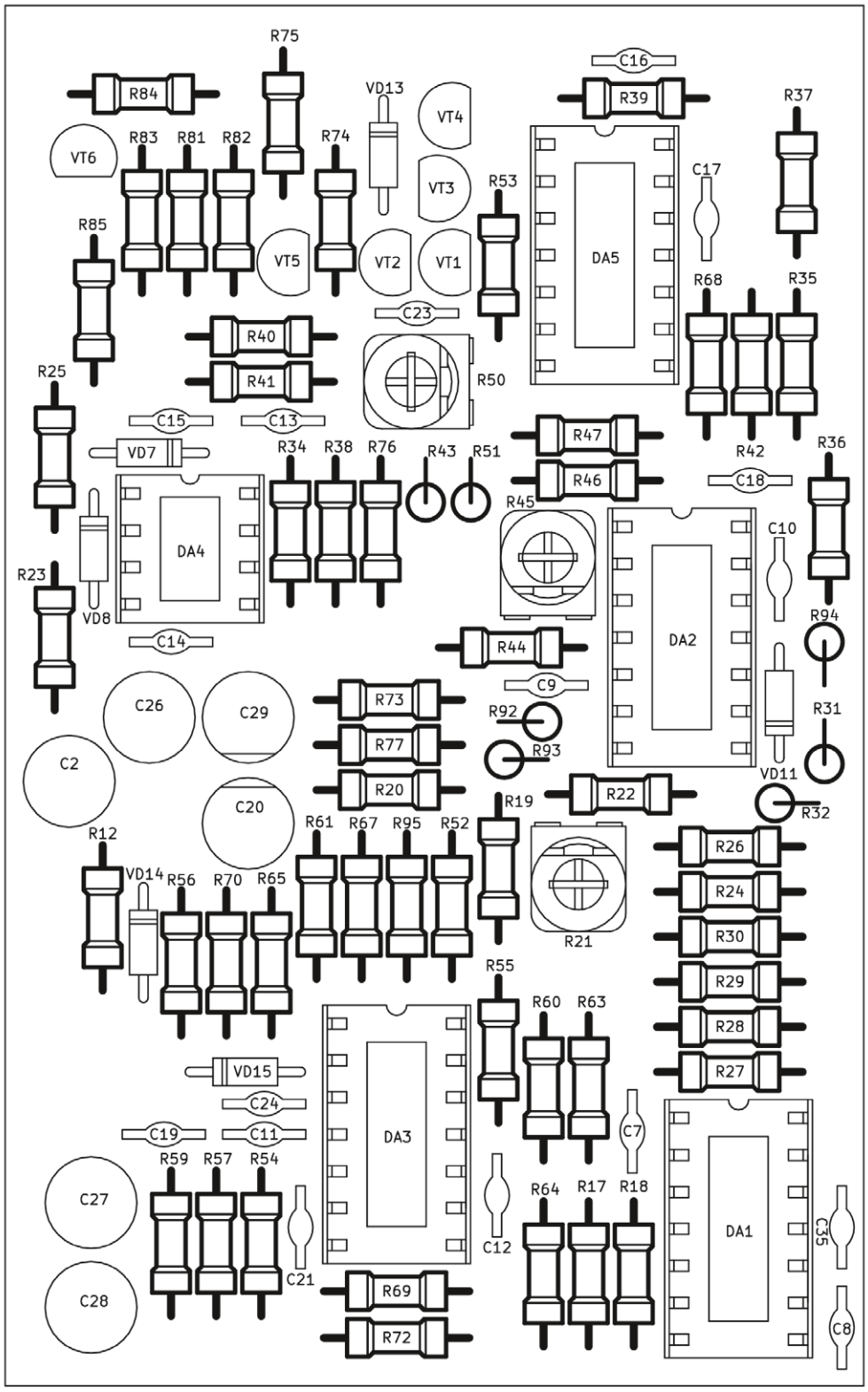
R75
C16
R84
VD13
R39
R37
VT4
VT6
R83
R81
R82
R74
VT3
R53
C17
DA5
R85
VT5
VT2
VT1
R68
R35
C23
R40
R41
R50
R25
C15
C13
R47
R42
R36
VD7
R34
R38
R76
R43
R51
R46
C18
R45
DA4
C10
R23
VD8
R94
C14
R44
DA2
C9
C26
C29
R73
R92
R31
R77
R93
C2
VD11
R20
R22
R32
C20
R19
R61
R67
R95
R52
R12
R26
VD14
R56
R70
R65
R24
R30
R21
R55
R29
R60
R63
R28
R27
VD15
C24
DA3
C19
C11
C7
R59
R57
R54
C27
R64
R17
R18
C12
DA1
C35
C21
C28
R69
C8
R72

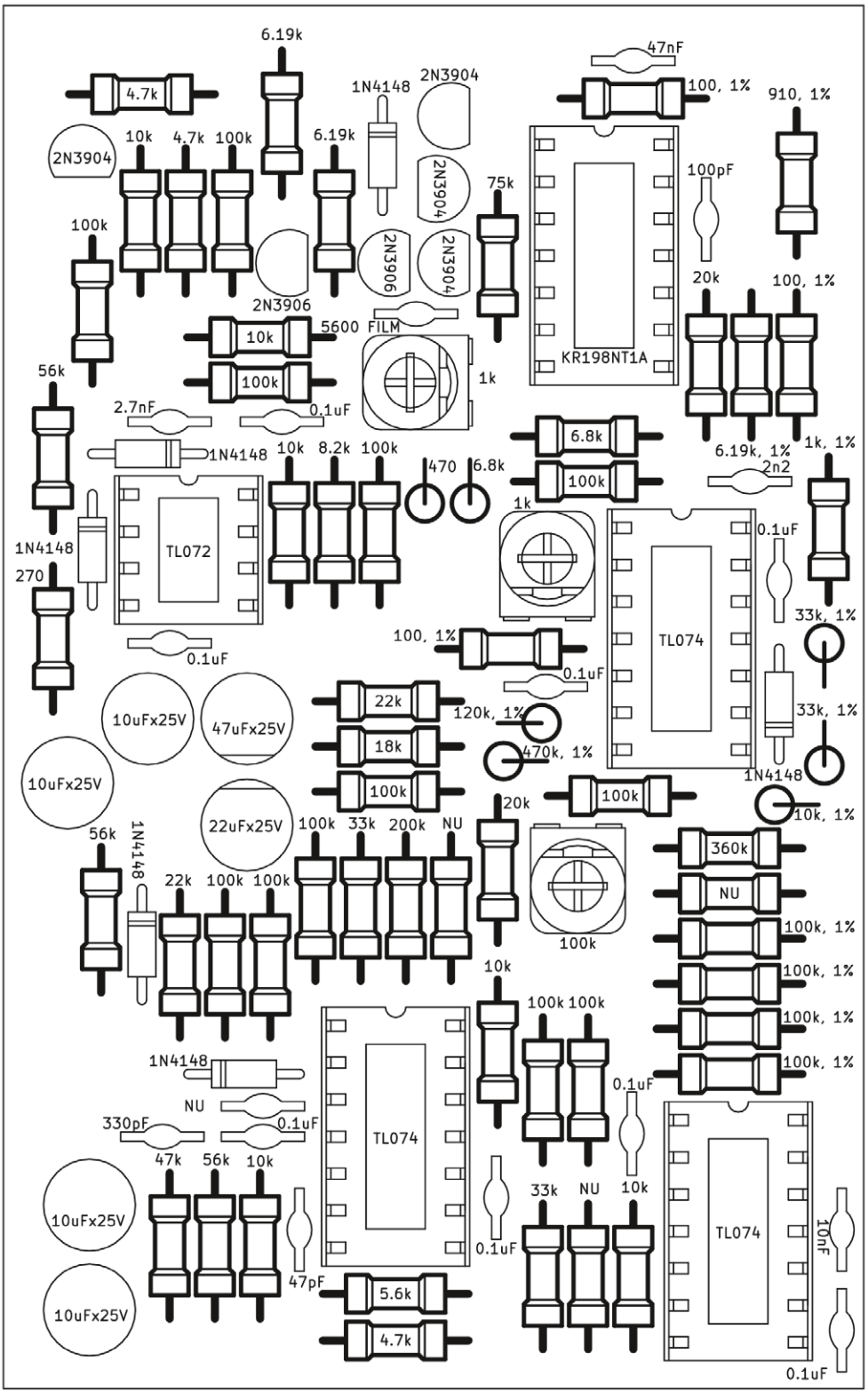
6.19k
4.7k
1N4148
2N3904
47nF
100, 1%
910, 1%
2N3904
10k
4.7k
100k
6.19k
2N3904
75k
100pF
100k
2N3906
2N3904
20k
100, 1%
2N3906
10k
5600 FILM
KR198NT1A
100k
1k
56k
2.7nF
0.1uF
6.8k
6.19k, 1%
1k, 1%
1N4148
10k
8.2k
100k
470
6.8k
100k
2n2
1k
TL072
0.1uF
1N4148
270
TL074
33k, 1%
100, 1%
0.1uF
0.1uF
10uFx25V
47uFx25V
22k
120k, 1%
33k, 1%
18k
470k, 1%
1N4148
10uFx25V
100k
100k
10k, 1%
22uFx25V
20k
56k
1N4148
100k
33k
200k
NU
360k
22k
100k
100k
NU
100k
100k, 1%
10k
100k, 1%
100k
100k
100k, 1%
100k, 1%
1N4148
0.1uF
NU
330pF
0.1uF
TL074
47k
56k
10k
33k
NU
10k
10uFx25V
0.1uF
TL074
10nF
47pF
5.6k
10uFx25V
4.7k
0.1uF

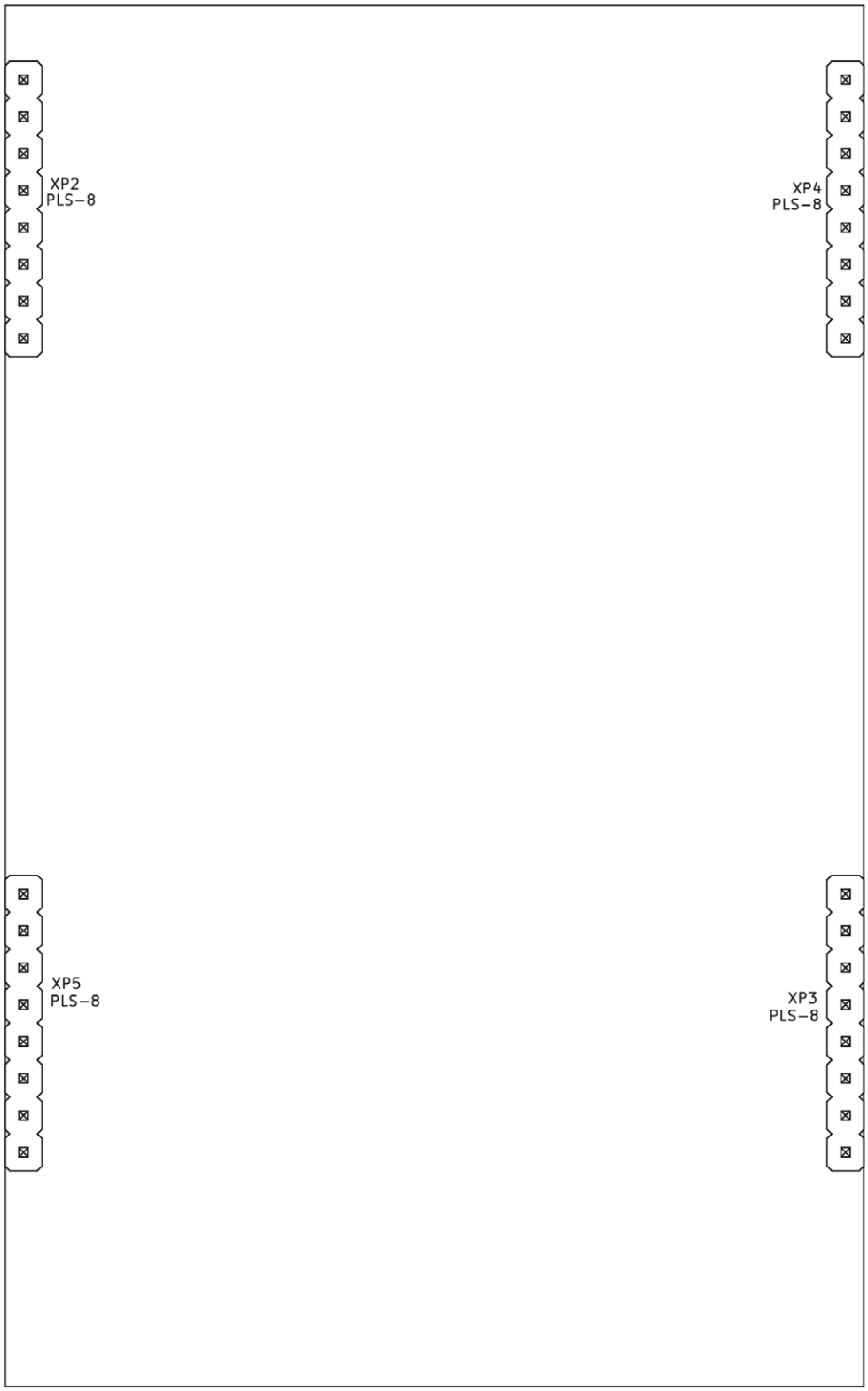
XP2
PLS-8
XP4
PLS-8
XP5
PLS-8
XP3
PLS-8